IDS 24
RUGGED DISPLAY

Rugged, Low Profile, MIL-Spec,
Flat Panel LED Display w/RTEV

Real-Time Enhanced Video

Leveraging a powerful video controller with an onboard FPGA, the IDS 24 hosts Real-Time Enhanced Video (RTEV) technology, allowing the display to apply advanced algorithm enhancements without time delays. User adjustable front panel controls offer on-the-fly algorithm tuning. RTEV-embedded displays deliver significant viewing advantages in: fog, haze, sandstorms, underwater, infrared imaging, low-light, over-saturated video and inclement weather conditions.

MIL-SPEC Ruggedization

IDS rugged displays are designed and tested to meet full MIL-SPEC requirements. The IDS chassis is constructed from aircraft-grade aluminum making it both durable and lightweight while the internal electronics utilize high performance PCB material. The versatility of the IDS display from its optimized footprint to its robust environmental specifications makes it an ideal display solution for military applications in harsh environments.

Thin Bezel, Low Profile WUXGA LED Display

Utilizing an innovative rear machined aluminum structural support design, ZMicro is able to minimize the front bezel to provide an immersive viewing experience for the operator while providing flexible mounting options. The IDS mounting options include VESA, 19" RETMA rack, or a quick-release mounting for ground control stations. The IDS 24 rugged display boasts a brilliant 1920 x 1200 (WUXGA) resolution with a custom LED backlit to ensure brightness uniformity across all segments of the display.

Ideal for Airborne, Shipboard,
& Ground Stations

Don't miss a thing with RTEV!

(Actual enhancement images; no manipulation has been performed.)

Smoke

Sand

HIGHLIGHTS

- MIL-Spec, low-profile, rugged display
- 24" active viewing area LED display
- 1920 x 1200 (WUXGA) resolution
- LED backlight
- Brightness of 400 cd/m²
- Real-Time Enhanced Video (RTEV) capable
- Digital and analog video signal support
- Durable & lightweight machined-aluminum design
- VESA, 19" RETMA, & GCS mounting options
- Resistive touchscreen option
- Optically bonded AR / EMI shield option
- On-screen display for user customization

FOR MORE INFO

Contact us at sales@zmicro.com
or call 858.831.7000.

IDS 24 | RUGGED DISPLAY

To see all of our display options, visit zmicro.com/displays.

SCHEMATICS

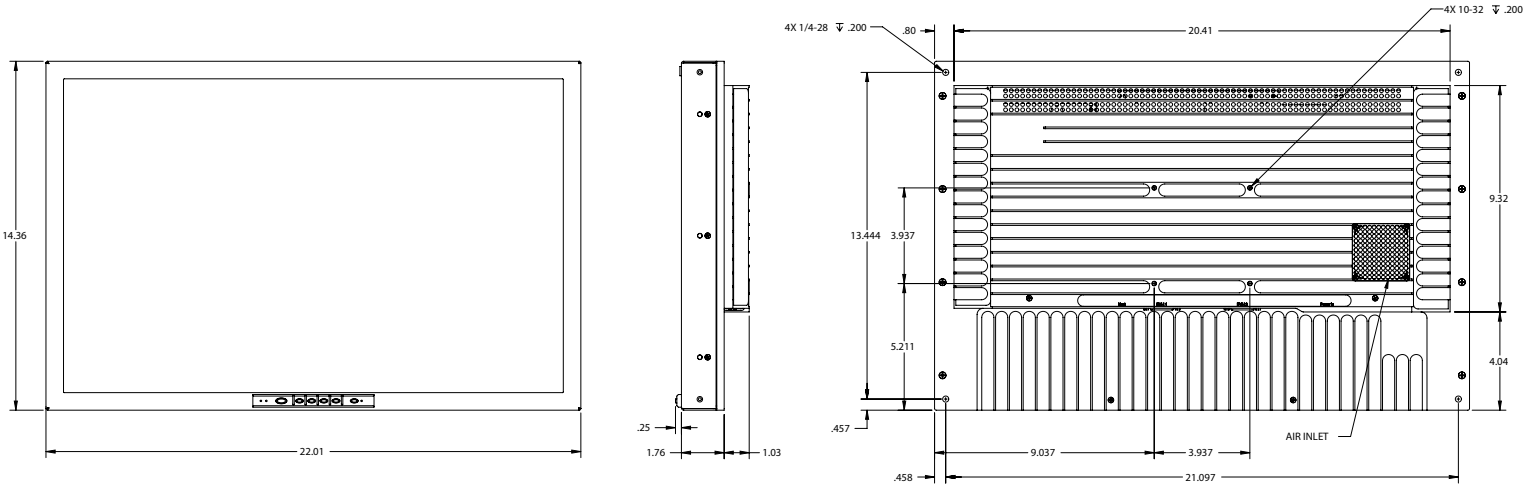

TECHNICAL SPECIFICATIONS

SIZE & WEIGHT	Dimensions	14.36 x 22.01 x 2.79 inch / 365 x 559 x 71 mm
	Weight	19.35 lbs. / 8.8 kg
POWER	Power Supply	100-240V AC, .88A, 50/60 Hz
	Power Consumption	56 W
SPECIFICS	Panel Size	24" active viewing area
	Native Resolution	1920 x 1200 (WUXGA)
	Backlight	LED
	Brightness	400 cd/m²
	Contrast Ratio	1000:1
	Color Palette	16.7 Million
	Controls	INPUT, MENU/SELECT, MINUS, PLUS, EXIT, STANDBY
	Panel Options	Optically bonded AR shield, Resistive touch panel, EMI Mesh, RTEV
	Scaling Modes	No Scale, Fullscreen Scaled, SAR (Scaled w/Aspect Ratio Retained)
	Connectors	2 x DVI-I, C14 IEC 320 socket, USB Type B
	Mounting	VESA (100x100), 19" RETMA (w/adapter plate bracket), GCS quick-release adapter
ENVIRONMENTAL	Operating Temperature	0° to 50° C
	Storage Temperature	-40° to +70° C
	Humidity	Up to 95% Non-condensing @40° C for 48 hours
	Operating Altitude	Up to 10,000 ft.
	Non-operating Altitude	Up to 40,000 ft.
	Vibration	D0-160, Section 8, Curve B
	Shock	MIL-STD-810G, 30gs
	EMI / EMC	MIL-STD-461F, RE101 Army Limits, RE102 Surface Ship Limits, RS101, RS103, CE102, CS114, CS115, CS116
	MTBF	Min. 50,000 hrs (backlight only)
	MTTR	< 30 mins.
	ESD Safety	IEC 61000-4-2 8kv contact, 15kv air
OTHER	Quality	IPC/ISO 9001:2008 and applicable sections of the MIL-HDBK-454

ZMicro, Inc. is an ISO 9001:2008 certified company and compliant with AS 9100 requirements. Product information and technical data provided are typical of standard configurations of the described products. Measured results may vary slightly between units. This information is subject to change without notice. For more information, or the latest version of this product sheet, please visit our website @ www.zmicro.com